SMART TRAFFIC LIGHT SYSTEM

MICROPROCESSORS PROJECT 1

GROUP 4

GROUP MEMBERS:

ABOVE STEPHEN KOI	7341123
AGBOWADA WISDOM SENA	7341523
ODURO AGNES	7343823
ANOKYE EUGENE DONKOR	7342223
MENSAH SOLOMON KWAKU	7343523
KOBZIE FUZIEMATA	7343323

TABLE OF CONTENTS:

- Problem Statement.....3
- Methodology.....5
- Simulation.....15
- Conclusion.....16

PROBLEM STATEMENT:

Modern urban intersections often rely on **fixed-time traffic light systems**, which allocate equal signal durations to all roads regardless of actual traffic conditions. This leads to several inefficiencies, including:

- **Unnecessary delays** on roads with little or no traffic
- **Increased congestion** on heavily populated roads
- **Wasted fuel and higher emissions** due to prolonged waiting times
- **Driver frustration** and reduced overall traffic efficiency

In many developing regions and growing cities, traffic density is **not uniform across all directions**, and it varies significantly throughout the day. Traditional systems fail to adapt to these dynamic conditions.

PROBLEM STATEMENT:

Therefore, there is a need for an **intelligent and adaptive traffic control system** that can:

- Monitor real-time traffic conditions
- Dynamically allocate green light durations
- Prioritize roads with higher vehicle density
- Minimize waiting time and improve traffic flow efficiency

This project proposes the design and implementation of a **Smart Traffic Light System** using **ultrasonic sensors, a microcontroller (ESP32), and visual display units (LED traffic lights, 7-segment display, and LCD)**. The system measures vehicle proximity on two intersecting roads and adjusts signal timing accordingly, ensuring optimal traffic management at a two-way intersection.

METHODOLOGY:

1. System Design Approach

To address the inefficiencies of fixed-time traffic systems, an **adaptive traffic control approach** was adopted. The system dynamically adjusts traffic light durations based on **real-time vehicle presence** using ultrasonic sensors.

The methodology involves three main stages:

- **Sensing (Data Acquisition)**
- **Decision Making (Processing & Logic)**
- **Actuation (Traffic Control Output)**

This ensures that traffic signals respond intelligently to varying traffic conditions at a **two-way intersection (Road A and Road B)**.

METHODOLOGY:

2. Hardware Architecture

The system is built around a **microcontroller (ESP32)** which interfaces with the following components:

2.1 Ultrasonic Sensors

Two sensors are used:

- Sensor A → monitors Road A
- Sensor B → monitors Road B

Each sensor measures the **distance of vehicles** from the intersection.

Shorter distance indicates **higher traffic density**.

METHODOLOGY:

2.2 Traffic Light LEDs

Each road is equipped with a set of LEDs:

Red LED → Stop

Yellow LED → Transition

Green LED → Go

Total:

Road A → 3 LEDs

Road B → 3 LEDs

METHODOLOGY:

2.3 7-Segment Display

Displays the **countdown timer** for the active green signal.

Helps simulate a real-world traffic light timer.

2.4 LCD (16x2, I2C)

Displays system status such as:

"Road A: GO"

"Road B: GO"

Remaining time in seconds

METHODOLOGY:

3. Software Design and Code Logic:

The system is implemented in **embedded C** using **Arduino IDE**, structured into modular functions:

3.1 Distance Measurement

•**Function:** long readDistance(int trigPin, int echoPin)

•**Operation:** Sends a 10μs pulse, measures echo return time, calculates distance as Distance = Time × 0.034 / 2

•**Purpose:** Determines vehicle proximity on each road.

METHODOLOGY:

3.2 Traffic Comparison Logic

•Compares distances from Road A and B with ±5 cm tolerance:

- •**Equal Traffic:** Both roads get **10s green each**
- •**Road A Priority:** Road A gets **10s green**, Road B **5s**
- •**Road B Priority:** Road B gets **10s green**, Road A **5s**

3.3 Traffic Light Control

•**Road A Control:** roadA_Green(int time) → *Green_A ON, Red_B ON, countdown, Yellow_A for 2s*

•**Road B Control:** roadB_Green(int time) → *Green_B ON, Red_A ON, countdown, Yellow_B for 2s*

METHODOLOGY:

3.4 Countdown Timer

- **Function:** countdown(int t)
- Updates **7-segment display** (last digit) and **LCD** (full seconds) every second using delay(1000).

3.5 7-Segment Display Logic

- **Function:** displayDigit(int num)
- Uses a byte digits[10][7] array to control segments and display digits 0–9.

METHODOLOGY:

4. System Operation Flow

1. System initializes all pins and display modules.
2. Ultrasonic sensors continuously measure vehicle distance.
3. Microcontroller compares traffic density on both roads.
4. Decision is made based on predefined conditions.
5. Corresponding road is given green light priority.
6. Countdown timer is displayed.
7. Yellow light transition occurs before switching roads.
8. Process repeats continuously in a loop.

METHODOLOGY:

5. Circuit Schematic Overview

5.1 Sensor Connections

TRIG pins → Output pins of microcontroller

ECHO pins → Input pins

5.2 LED Connections

Each LED connected to GPIO pins through resistors

Separate pins for Red, Yellow, Green for each road

5.3 7-Segment Display

7 GPIO pins connected to segments (a–g)

Controlled using digital HIGH/LOW signals

METHODOLOGY:

5.4 LCD (I2C)

Connected via:

SDA → Data line

SCL → Clock line

Uses I2C protocol for efficient communication

6. System Characteristics

Adaptive: Adjusts signal timing based on real-time traffic

Efficient: Reduces waiting time and congestion

Scalable: Can be extended to more roads or sensors

Low-cost: Uses simple sensors and LEDs

SIMULATION:

sketch.ino | diagram.json | libraries.txt | Library Manager

```
#include <Wire.h>
#include <LiquidCrystal_I2C.h>

LiquidCrystal_I2C lcd(0x27, 16, 2);

// ================= LED PINS =================
#define RED_A 19
#define YELLOW_A 18
#define GREEN_A 5

#define RED_B 23
#define YELLOW_B 32
#define GREEN_B 17

// ================= ULTRASONIC =================
#define TRIG_A 4
#define ECHO_A 2
#define TRIG_B 15
#define ECHO_B 16

// ================= 7-SEGMENT =================
int segPins[7] = {13,12,14,27,26,25,33};

// digits (common cathode)
byte digits[10][7] = {
  {1,1,1,1,1,1,0}, //0
  {0,1,1,0,0,0,0}, //1
  {1,1,0,1,1,0,1}, //2
  {1,1,1,1,0,0,1}, //3
```

Simulation

00:52.896 99%

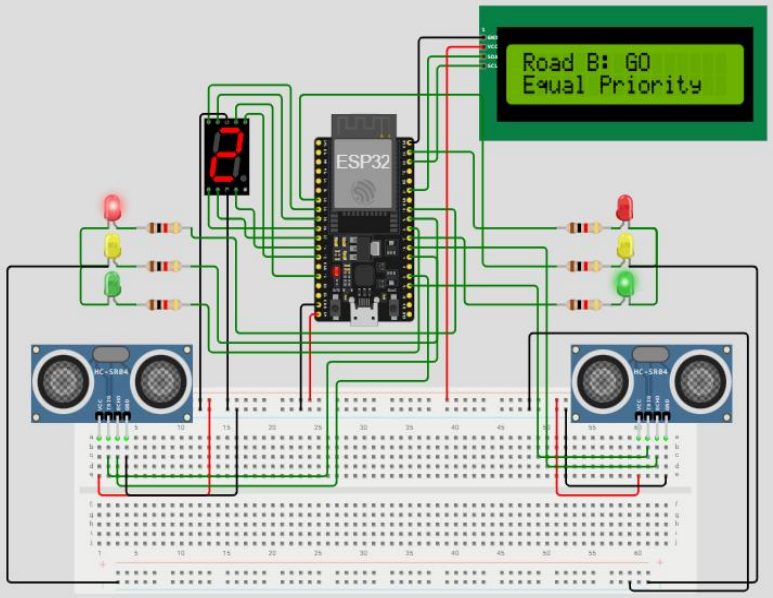


```
no 0 tail 12 room 4
load:0x40080400,len:2972
entry 0x400805dc
```

SIMULATION:

sketch.ino | diagram.json | libraries.txt | Library Manager

```
#include <Wire.h>
#include <LiquidCrystal_I2C.h>

LiquidCrystal_I2C lcd(0x27, 16, 2);

// ================ LED PINS ================
#define RED_A 19
#define YELLOW_A 18
#define GREEN_A 5

#define RED_B 23
#define YELLOW_B 32
#define GREEN_B 17

// ================ ULTRASONIC ================
#define TRIG_A 4
#define ECHO_A 2
#define TRIG_B 15
#define ECHO_B 16

// ================ 7-SEGMENT ================
int segPins[7] = {13,12,14,27,26,25,33};

// digits (common cathode)
byte digits[10][7] = {
  {1,1,1,1,1,1,0}, //0
  {0,1,1,0,0,0,0}, //1
  {1,1,0,1,1,0,1}, //2
  {1,1,1,1,0,0,1}, //3
```

Simulation

01:58.735 99%

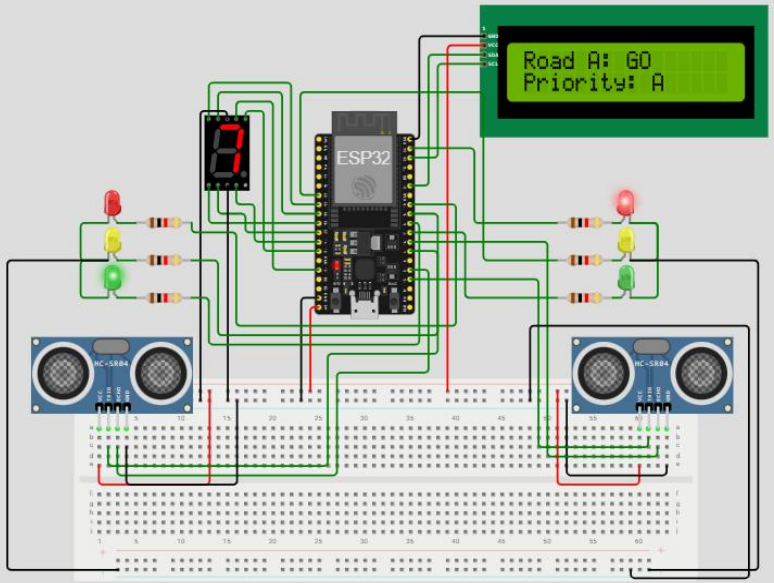


```
A: 369 | B: 369
A: 369 | B: 369
A: 157 | B: 369
```

SIMULATION:

sketch.ino | diagram.json | libraries.txt | Library Manager

```
#include <Wire.h>
#include <LiquidCrystal_I2C.h>

LiquidCrystal_I2C lcd(0x27, 16, 2);

// ================ LED PINS ================
#define RED_A 19
#define YELLOW_A 18
#define GREEN_A 5

#define RED_B 23
#define YELLOW_B 32
#define GREEN_B 17

// ================ ULTRASONIC ================
#define TRIG_A 4
#define ECHO_A 2
#define TRIG_B 15
#define ECHO_B 16

// ================ 7-SEGMENT ================
int segPins[7] = {13,12,14,27,26,25,33};

// digits (common cathode)
byte digits[10][7] = {
  {1,1,1,1,1,1,0}, //0
  {0,1,1,0,0,0,0}, //1
  {1,1,0,1,1,0,1}, //2
  {1,1,1,1,0,0,1}, //3
```

Simulation

02:47.487 99%

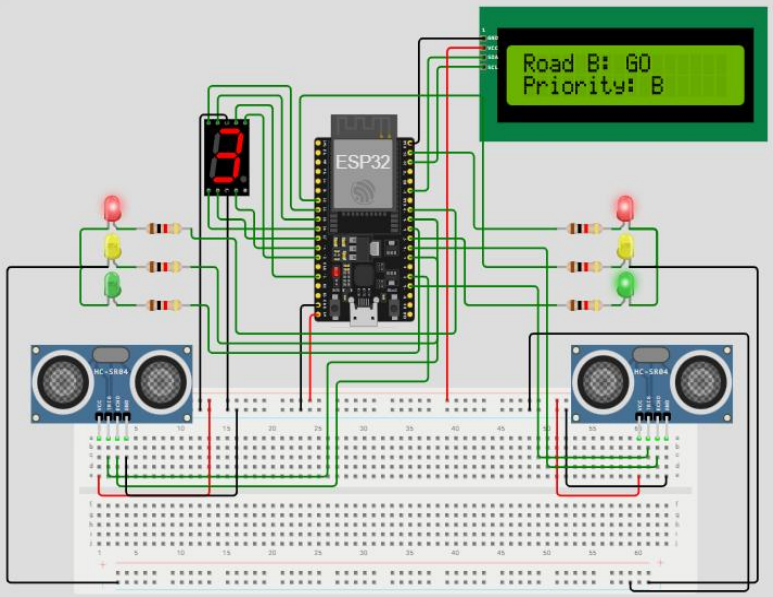


```
A: 157 | B: 369
A: 310 | B: 369
A: 340 | B: 108
```

CONCLUSION:

Conclusion

This project successfully designed and implemented a **Smart Traffic Light System** capable of dynamically adjusting signal timings based on real-time traffic conditions at a two-way intersection. By integrating ultrasonic sensors, a microcontroller, and visual display units, the system was able to monitor vehicle proximity and prioritize roads with higher traffic density.

Summary of Findings

The results obtained from both design and simulation demonstrate that:

The system effectively **detects traffic density** using ultrasonic sensors.

Adaptive timing allows roads with higher vehicle concentration to receive **longer green light durations**, improving traffic flow.

The use of a **7-segment display and LCD** enhances system transparency by providing real-time countdown and status information.

Compared to conventional fixed-time systems, the proposed system **reduces unnecessary waiting time** and improves overall efficiency at intersections.

CONCLUSION:

Challenges Encountered
During the development and simulation of the system, several challenges were identified:

- **Limited Traffic Representation:** The system estimates traffic using distance rather than actual vehicle count, which may not fully reflect real-world conditions.
- **Timing Constraints:** The use of delay-based timing (delay() function) reduces system responsiveness and;\ prevents simultaneous task execution.
- **Simulation Limitations:** The simulation environment does not perfectly replicate real-world traffic behavior, such as continuous vehicle movement or unpredictable conditions.

CONCLUSION:

7. Limitations of the Approach

- Only considers **distance**, not exact vehicle count
- Suitable for **low to medium traffic intersections**
- Limited to **two-road intersection** in current design
- Delay-based timing (delay()) may reduce responsiveness

8. Possible Improvements

- Replace ultrasonic sensors with **camera-based detection**
- Add **multiple sensors per lane** for better accuracy
- Integrate with **IoT/cloud systems** for smart city applications

CONCLUSION:

Final Remark:

Overall, the Smart Traffic Light System demonstrates a practical and cost-effective solution for improving traffic management in **low to medium traffic intersections**. With further enhancements, it has the potential to be deployed in real-world smart transportation systems, contributing to reduced congestion, improved travel time, and better urban mobility.